Preferred wiring diagram

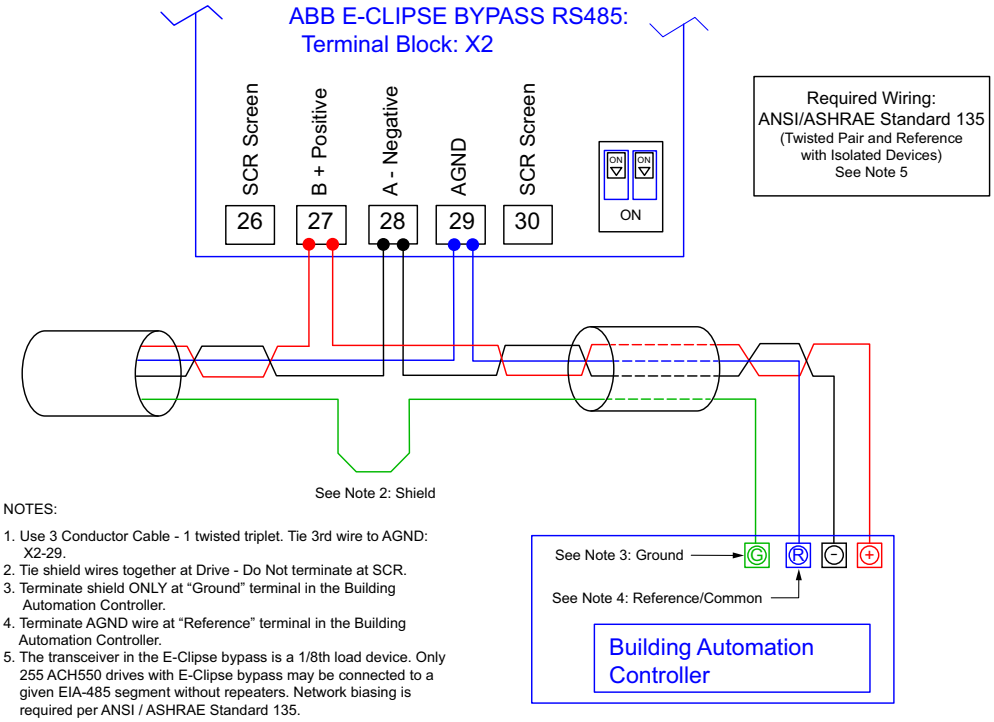

NOTES:

1. Use 3 Conductor Cable - 1 twisted triplet. Tie 3rd wire to AGND: X2-29.
2. Tie shield wires together at Drive - Do Not terminate at SCR.
3. Terminate shield ONLY at “Ground” terminal in the Building Automation Controller.
4. Terminate AGND wire at “Reference” terminal in the Building Automation Controller.
5. The transceiver in the E-Clipse bypass is a 1/8th load device. Only 255 ACH550 drives with E-Clipse bypass may be connected to a given EIA-485 segment without repeaters. Network biasing is required per ANSI / ASHRAE Standard 135.

Alternate wiring diagram

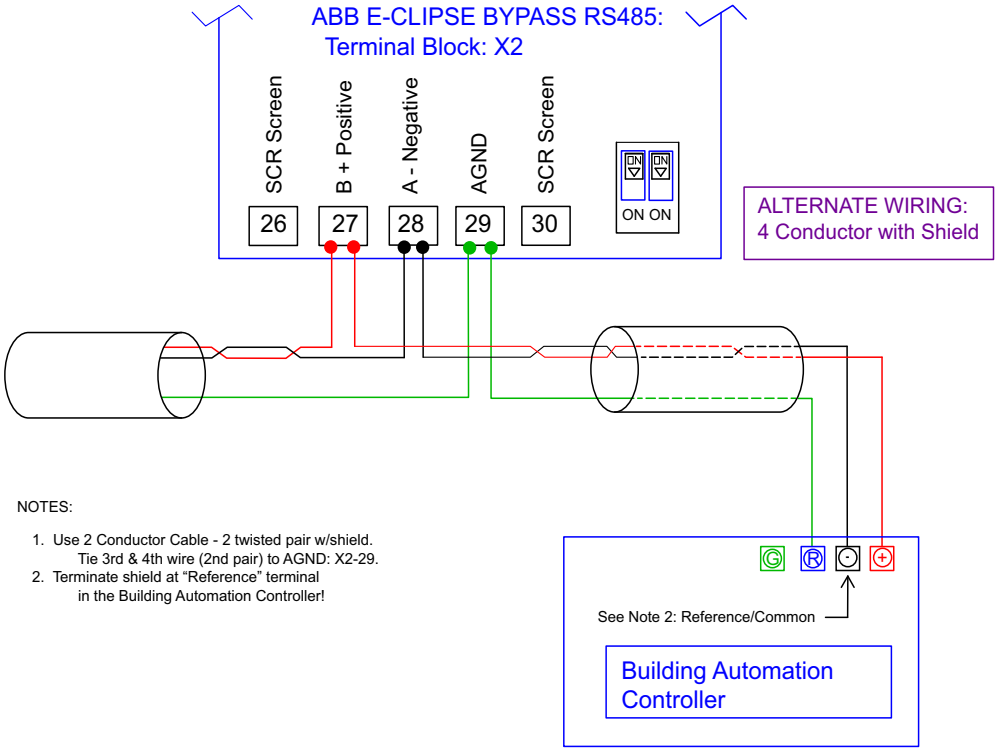

NOTES:

1. Use 2 Conductor Cable - 2 twisted pair w/shield. Tie 3rd & 4th wire (2nd pair) to AGND: X2-29.
2. Terminate shield at “Reference” terminal in the Building Automation Controller!